Blue

Work Order ID 71043

Wednesday, June 22, 2011 8:57:19 AM

Item ID: D206-667-103BL
Revision ID: U/R
Item Name: Crosstube Fwd, Blue

Accept

Setup Start
Stop

Start Date: 6/21/2011 **Start Qty:** 1.00
Required Date: 7/8/2011 **Req'd Qty:** 1.00
Reference:

Cust Item ID:
Customer:

Run Start
Stop

Approvals: **Process Plan:** W **Date:** _____ **Tooling:** _____ **Date:** _____
QC: _____ **Date:** _____ **SPC (Y/N):** _____ **Date:** _____

Sequence ID/ Work Center ID	Operation Description	Set Up/ Run Hours	Tool ID	Tool #	Plan Code	Accept Qty	Reject Qty	Reject Number	Insp. Stamp
Draw Nbr / **Revision Nbr**									
D206-667-143 / C U/R GK CP 11.06.22									
100	DOCUMENT CONTROL	0.00							
DC	**Memo**	0.00							
Document Control	Photocopy bluefile and create labels as per RPR D206-667-103 CHG004 @CHG 005								
110	Pick Kit	0.00							
Packaging	Packaging								
Packaging	**Memo**	0.00							
120	BENDING MACHINE - CROSSTUBES	0.00							
CNC Bend 2	**Memo**	0.00							
CNC Alpha 160 Bender	Bend tube as per Dwg D206-667-143 using CNC bender program								

SCRAP

DP 11-7-6

DP 11-7-6 PTP

Dart Aerospace Ltd

W/O:		WORK ORDER CHANGES					
DATE	STEP	PROCEDURE CHANGE	By	Date	Qty	Approval Chief Eng / Prod Mgr	Approval QC Inspector

Part No: D206-1667-253 PAR #: Fault Category: Longly Gear NCR: (Yes) No DQA: CK Date: 11/07/15

11-724 Resolution: Colour ~~Goo~~ code tangent lines SCRAP Disposition: Cross tubes SCRAP QA: N/C Closed: Date: 11-07-15

NCR: 71043 **WORK ORDER NON-CONFORMANCE (NCR)** 22391.70

DATE	STEP	Description of NC Section A	Corrective Action Section B: Initial Chief Eng	Action Description Chief Eng	Sign & Date	Verification Section C	Approval Chief Eng	Approval QC Inspector
11-7-6	120	Employee accidentally positioned tube wrong in bender. operator did not notice while doing his approach. RC; Employee error + lack of attention. training	11/07/06 25042	Tube is over bent by 1½" spent height. Scrap tube	JW DP 11-7-11	SAD 11-07-14	11/07/06 25042	11/07/06
				Correct action — to Prevent this from happen again colour code Different tangent Lines From now on.	JW DP 11-7-11	SAD 11-07-14		11/07/06

NOTE: Date & initial all entries

Work Order ID 71043

Wednesday, June 22, 2011 8:57:19 AM

Item ID: D206-667-103BL

Revision ID: U/R

Item Name: Crosstube Fwd, Blue

Accept

Setup **Start**

Stop

Start Date: 6/21/2011 **Start Qty:** 1.00

Required Date: 7/8/2011 **Req'd Qty:** 1.00

Reference:

Cust Item ID:

Customer:

Run **Start**

Stop

Approvals: **Process Plan:** _____ **Date:** _____ **Tooling:** _____ **Date:** _____

QC: _____ **Date:** _____ **SPC (Y/N):** _____ **Date:** _____

Sequence ID/ Work Center ID	Operation Description	Set Up/ Run Hours	Tool ID	Tool #	Plan Code	Accept Qty	Reject Qty	Reject Number	Insp. Stamp
130	QC15- Crosstube Dimensional Check	0.00							
QC	**Memo**	0.00							
Quality Control									

Dart Aerospace Ltd

W/O:		WORK ORDER CHANGES					
DATE	STEP	PROCEDURE CHANGE	By	Date	Qty	Approval Chief Eng / Prod Mgr	Approval QC Inspector

Part No: _____ **PAR #:** _____ **Fault Category:** _____ **NCR:** Yes No **DQA:** _____ **Date:** _____

Resolution: _____ **Disposition:** _____ **QA: N/C Closed:** _____ **Date:** _____

NCR:		WORK ORDER NON-CONFORMANCE (NCR)						
DATE	STEP	Description of NC Section A	Corrective Action Section B			Verification Section C	Approval Chief Eng	Approval QC Inspector
			Initial Chief Eng	Action Description Chief Eng	Sign & Date			

NOTE: Date & initial all entries

H:\fFORMS\Quality Assurance\approved QA\NCRWO RevE

Work Order ID 71043

Wednesday, June 22, 2011 8:57:19 AM

Item ID: D206-667-103BL

Revision ID: U/R

Item Name: Crosstube Fwd, Blue

Start Date: 6/21/2011 **Start Qty:** 1.00

Required Date: 7/8/2011 **Req'd Qty:** 1.00

Reference:

Accept

Setup Start

Stop

Cust Item ID:

Customer:

Run Start

Stop

Approvals: **Process Plan:** _____ **Date:** _____ **Tooling:** _____ **Date:** _____

QC: _____ **Date:** _____ **SPC (Y/N):** _____ **Date:** _____

Sequence ID/ Work Center ID	Operation Description	Set Up/ Run Hours	Tool ID	Tool #	Plan Code	Accept Qty	Reject Qty	Reject Number	Insp. Stamp
140	Crosstubes	0.00							
Crosstubes		0.00							
Crosstubes									

Memo

1-Drill holes & ream using drill Jig DT8541 & DT8542 as per Dwg D206-667-143. Drill all (3) top holes.

3-Flip tube and switch drilling Jigs from right to left, left to right. Locate Jigs off existing holes using "T" pins.

4-Drill pilot holes using drill Jig DT8541 & DT8542 as per Dwg D206-667-143. Drill only the top (2) holes.

5-Drill pilot holes as per Dwg D206-667-143.Drill only the top (2) holes.

6-Drill Fwd rivet holes using drill Jig DT8787FWD as per Dwg D206-667-143. Note: Fwd side has 3x top holes.

7-Drill Aft rivet holes using drill Jig DT8787AFT as per Dwg D206-667-141.

8-C'sink holes as per Dwg D206-667-143. Allow rivet to sit below surface to compensate for paint.

9 -Scribe part # and batch # using vibrating stylus as per Dwg D206-667-143 Inside of Cuff(Donot engrave on outside of tube)

10-Deburr & Inspect for surface damage. Repair damage within limits as per Dwg D206-667-143

Dart Aerospace Ltd

W/O:		WORK ORDER CHANGES					
DATE	STEP	PROCEDURE CHANGE	By	Date	Qty	Approval Chief Eng / Prod Mgr	Approval QC Inspector

Part No: _____ **PAR #:** _____ **Fault Category:** _____ **NCR:** Yes No **DQA:** _____ **Date:** _____

Resolution: _____ **Disposition:** _____ **QA: N/C Closed:** _____ **Date:** _____

NCR:		WORK ORDER NON-CONFORMANCE (NCR)						
DATE	STEP	Description of NC Section A	Corrective Action Section B			Verification Section C	Approval Chief Eng	Approval QC Inspector
			Initial Chief Eng	Action Description Chief Eng	Sign & Date			

NOTE: Date & initial all entries

H:\fFORMS\Quality Assurance\approved QA\NCRWO RevE

Work Order ID 71043

Wednesday, June 22, 2011 8:57:19 AM

Item ID: D206-667-103BL

Revision ID: U/R

Item Name: Crosstube Fwd, Blue

Accept

Setup **Start**

Stop

Start Date: 6/21/2011 **Start Qty:** 1.00

Required Date: 7/8/2011 **Req'd Qty:** 1.00

Reference:

Cust Item ID:

Customer:

Run **Start**

Stop

Approvals: **Process Plan:** _____ **Date:** _____ **Tooling:** _____ **Date:** _____

QC: _____ **Date:** _____ **SPC (Y/N):** _____ **Date:** _____

Sequence ID/ Work Center ID	Operation Description	Set Up/ Run Hours	Tool ID	Tool #	Plan Code	Accept Qty	Reject Qty	Reject Number	Insp. Stamp
150	Crosstubes Chemical Conversion	0.00							
HandFXtube	**Memo**	0.00							
Hand Finishing Crosstubes									
160	QC3- Inspect Part Finish	0.00							
QC	**Memo**	0.00							
Quality Control									
170	QC5- Inspect part completeness to step on W/O	0.00							
QC	**Memo**	0.00							
Quality Control									

Dart Aerospace Ltd

W/O:		WORK ORDER CHANGES					
DATE	STEP	PROCEDURE CHANGE	By	Date	Qty	Approval Chief Eng / Prod Mgr	Approval QC Inspector

Part No: _____ **PAR #:** _____ **Fault Category:** _____ **NCR:** Yes No **DQA:** _____ **Date:** _____

Resolution: _____ **Disposition:** _____ **QA: N/C Closed:** _____ **Date:** _____

NCR:		WORK ORDER NON-CONFORMANCE (NCR)						
DATE	STEP	Description of NC Section A	Corrective Action Section B			Verification Section C	Approval Chief Eng	Approval QC Inspector
			Initial Chief Eng	Action Description Chief Eng	Sign & Date			

NOTE: Date & initial all entries

H:\fFORMS\Quality Assurance\approved QA\NCRWO RevE

Work Order ID 71043

Wednesday, June 22, 2011 8:57:19 AM

Item ID: D206-667-103BL
Revision ID: U/R
Item Name: Crosstube Fwd, Blue

Accept

Setup **Start**
Stop

Start Date: 6/21/2011 **Start Qty:** 1.00
Required Date: 7/8/2011 **Req'd Qty:** 1.00
Reference:

Cust Item ID:
Customer:

Run **Start**
Stop

Approvals: **Process Plan:** _____ **Date:** _____ **Tooling:** _____ **Date:** _____
QC: _____ **Date:** _____ **SPC (Y/N):** _____ **Date:** _____

Sequence ID/ Work Center ID	Operation Description	Set Up/ Run Hours	Tool ID	Tool #	Plan Code	Accept Qty	Reject Qty	Reject Number	Insp. Stamp
180	Outsource process - NDT per QSI038 4.1	0.00							
Outsource2	**Memo**	0.00							
Outsource process - NDT	CROSSTUBES								
190		0.00							
Packaging	Packaging								
Packaging	**Memo**	0.00							
Packaging	Ensure copy of NDT results attached to work order.								
200	QC5- Inspect part completeness to step on W/O	0.00							
QC	**Memo**	0.00							
Quality Control									

Dart Aerospace Ltd

W/O:		WORK ORDER CHANGES					
DATE	STEP	PROCEDURE CHANGE	By	Date	Qty	Approval Chief Eng / Prod Mgr	Approval QC Inspector

Part No: _____ PAR #: _____ Fault Category: _____ NCR: Yes No DQA: _____ Date: _____

Resolution: _____ Disposition: _____ QA: N/C Closed: _____ Date: _____

NCR:		WORK ORDER NON-CONFORMANCE (NCR)						
DATE	STEP	Description of NC Section A	Corrective Action Section B			Verification Section C	Approval Chief Eng	Approval QC Inspector
			Initial Chief Eng	Action Description Chief Eng	Sign & Date			

NOTE: Date & initial all entries

H:\fFORMS\Quality Assurance\approved QA\NCRWO RevE

Work Order ID 71043

Wednesday, June 22, 2011 8:57:19 AM

Item ID: D206-667-103BL
Revision ID: U/R
Item Name: Crosstube Fwd, Blue

Accept

Setup Start
Stop

Start Date: 6/21/2011 **Start Qty:** 1.00
Required Date: 7/8/2011 **Req'd Qty:** 1.00
Reference:

Cust Item ID:
Customer:

Run Start
Stop

Approvals: **Process Plan:** _____ **Date:** _____ **Tooling:** _____ **Date:** _____
QC: _____ **Date:** _____ **SPC (Y/N):** _____ **Date:** _____

Sequence ID/ Work Center ID	Operation Description	Set Up/ Run Hours	Tool ID	Tool #	Plan Code	Accept Qty	Reject Qty	Reject Number	Insp. Stamp
210	SprayPaint	0.00							
SprayPaint	**Memo**	0.00							
Spray Painting	1-Prime inside and outside crosstube as per QSI 005 4.2 2-Paint outside crosstube with White Imron as per QSI 005 4.2 PRIME: Start Time:_____ Fininsh Time:_____ PAINT: Start Time:_____ Finish Time:_____								
220	QC14- Inspect Spray Paint	0.00							
QC	**Memo**	0.00							
Quality Control	Wrap in plastic bag to protect from scratches								

Dart Aerospace Ltd

W/O:		WORK ORDER CHANGES					
DATE	STEP	PROCEDURE CHANGE	By	Date	Qty	Approval Chief Eng / Prod Mgr	Approval QC Inspector

Part No: _____ **PAR #:** _____ **Fault Category:** _____ **NCR:** Yes No **DQA:** _____ **Date:** _____

Resolution: _____ **Disposition:** _____ **QA: N/C Closed:** _____ **Date:** _____

NCR:		WORK ORDER NON-CONFORMANCE (NCR)						
DATE	STEP	Description of NC Section A	Corrective Action Section B			Verification Section C	Approval Chief Eng	Approval QC Inspector
			Initial Chief Eng	Action Description Chief Eng	Sign & Date			

NOTE: Date & initial all entries

H:\fFORMS\Quality Assurance\approved QA\NCRWO RevE

Work Order ID 71043

Wednesday, June 22, 2011 8:57:19 AM

Item ID: D206-667-103BL
Revision ID: U/R
Item Name: Crosstube Fwd, Blue

Accept

Setup Start
Stop

Start Date: 6/21/2011 **Start Qty:** 1.00
Required Date: 7/8/2011 **Req'd Qty:** 1.00
Reference:

Cust Item ID:
Customer:

Run Start
Stop

Approvals: **Process Plan:** _____ **Date:** _____ **Tooling:** _____ **Date:** _____
QC: _____ **Date:** _____ **SPC (Y/N):** _____ **Date:** _____

Sequence ID/ Work Center ID	Operation Description	Set Up/ Run Hours	Tool ID	Tool #	Plan Code	Accept Qty	Reject Qty	Reject Number	Insp. Stamp
230	Crosstubes	0.00							
Crosstubes	**Memo**	0.00							
Crosstubes	1-Install support using 0.03" to 0.06" thick layer of magnobond 6398 per QSI 015. Let cure for 12h after installation and prior to packaging. Note: (2) Aft holes should be facing up. A/R Magnobond 6398 :_____ 2-Install supports and clamps as per Dwg D206-667-143. Torque clamps to 80-100 in lb 3-Install nut plates as per Dwg D206-667-143. Touch-up rivet heads with Imron paint.				USE PROSEAL PTO				
240	QC5- Inspect part completeness to step on W/O	0.00							
QC	**Memo**	0.00							
Quality Control									

Dart Aerospace Ltd

W/O:		WORK ORDER CHANGES					
DATE	STEP	PROCEDURE CHANGE	By	Date	Qty	Approval Chief Eng / Prod Mgr	Approval QC Inspector
11.06.22	230	BOND SUPPORTS WITH PROSEAL PER ATTACHED PROCEDURE				11.06.22	

Part No: _____ **PAR #:** _____ **Fault Category:** _____ **NCR:** Yes No **DQA:** _____ **Date:** _____

Resolution: _____ **Disposition:** _____ **QA: N/C Closed:** _____ **Date:** _____

NCR:		WORK ORDER NON-CONFORMANCE (NCR)						
DATE	STEP	Description of NC Section A	Corrective Action Section B			Verification Section C	Approval Chief Eng	Approval QC Inspector
			Initial Chief Eng	Action Description Chief Eng	Sign & Date			

NOTE: Date & initial all entries

H:\fFORMS\Quality Assurance\approved QA\NCRWO RevE

Work Order ID 71043

Wednesday, June 22, 2011 8:57:19 AM

Item ID: D206-667-103BL
Revision ID: U/R
Item Name: Crosstube Fwd, Blue

Accept

Setup **Start**
Stop

Start Date: 6/21/2011 **Start Qty:** 1.00
Required Date: 7/8/2011 **Req'd Qty:** 1.00
Reference:

Cust Item ID:
Customer:

Run **Start**
Stop

Approvals: **Process Plan:** _____ **Date:** _____ **Tooling:** _____ **Date:** _____
QC: _____ **Date:** _____ **SPC (Y/N):** _____ **Date:** _____

Sequence ID/ Work Center ID	Operation Description	Set Up/ Run Hours	Tool ID	Tool #	Plan Code	Accept Qty	Reject Qty	Reject Number	Insp. Stamp
250	Pick Kit	0.00							
Packaging	Memo	0.00							
Packaging									
260	QC4- 100% Inspect kits for completeness	0.00							
QC	Memo	0.00							
Quality Control									
270		0.00							
Packaging	Packaging								
Packaging	Memo	0.00							
Packaging	Identify and pack for shipping as per PPP D206-667-103 Location:_____ PPP Rev:_____								

Dart Aerospace Ltd

W/O:		WORK ORDER CHANGES					
DATE	STEP	PROCEDURE CHANGE	By	Date	Qty	Approval Chief Eng / Prod Mgr	Approval QC Inspector

Part No: _____ **PAR #:** _____ **Fault Category:** _____ **NCR:** Yes No **DQA:** _____ **Date:** _____

Resolution: _____ **Disposition:** _____ **QA: N/C Closed:** _____ **Date:** _____

NCR:		WORK ORDER NON-CONFORMANCE (NCR)						
DATE	STEP	Description of NC Section A	Corrective Action Section B			Verification Section C	Approval Chief Eng	Approval QC Inspector
			Initial Chief Eng	Action Description Chief Eng	Sign & Date			

NOTE: Date & initial all entries

H:\fFORMS\Quality Assurance\approved QA\NCRWO RevE

Work Order ID 71043

Wednesday, June 22, 2011 8:57:19 AM

Item ID: D206-667-103BL
Revision ID: U/R
Item Name: Crosstube Fwd, Blue

Accept

Setup **Start**
Stop

Start Date: 6/21/2011 **Start Qty:** 1.00
Required Date: 7/8/2011 **Req'd Qty:** 1.00
Reference:

Cust Item ID:
Customer:

Run **Start**
Stop

Approvals: **Process Plan:** _____ **Date:** _____ **Tooling:** _____ **Date:** _____
QC: _____ **Date:** _____ **SPC (Y/N):** _____ **Date:** _____

Sequence ID/ Work Center ID	Operation Description	Set Up/ Run Hours	Tool ID	Tool #	Plan Code	Accept Qty	Reject Qty	Reject Number	Insp. Stamp
280	QC21- Final Inspection - Work Order Release	0.00							
QC Quality Control	**Memo**	0.00							

UMF
11-07-14

Dart Aerospace Ltd

W/O:		WORK ORDER CHANGES					
DATE	STEP	PROCEDURE CHANGE	By	Date	Qty	Approval Chief Eng / Prod Mgr	Approval QC Inspector

Part No: _____ **PAR #:** _____ **Fault Category:** _____ **NCR:** Yes No **DQA:** _____ **Date:** _____

Resolution: _____ **Disposition:** _____ **QA: N/C Closed:** _____ **Date:** _____

NCR:		WORK ORDER NON-CONFORMANCE (NCR)						
DATE	STEP	Description of NC Section A	Corrective Action Section B			Verification Section C	Approval Chief Eng	Approval QC Inspector
			Initial Chief Eng	Action Description Chief Eng	Sign & Date			

NOTE: Date & initial all entries

H:\fFORMS\Quality Assurance\approved QA\NCRWO RevE

Picklist Print

Wednesday, June 22, 2011 8:57:16 AM

Work Order ID: 71043

Parent Item: D206-667-103BL

Parent Item Name: Crosstube Fwd, Blue

Start Date: 6/21/2011 **Required Date:** 7/8/2011

Start Qty: 1.00 **Required Qty:** 1.00

Comments: IIP RevA: new issue DD .09.11.23 verified by:EC

Component Item ID/ Item Name	Replacement Item ID	Mfg/ Purch	Bin Item	Primary Location	Last Location	Route Seq ID	Unit of Measure	Qty on Hand	Qty per Kit	Total Qty	Qty Issued	Date Issued	Status
D206-667-103TRN		Manufactured	No	B70435		110	Each	0.0000	1	1		11-7-6	
Crosstube Turning DetailL													
D2873-043		Manufactured	No			230	Each	28.0000	2	2			
Nut Plate Assembly													
				Location		**Loc Qty**		**Loc Code**					
				LG		28							
					68084	8							
					68801	20							
D2873-045		Manufactured	No			230	Each	23.0000	2	2			
Nut Plate Assembly													
				Location		**Loc Qty**		**Loc Code**					
				LG		20							
					68800	20							
				LG052		3							
					65992	1							
					67741	2							
D2891-1		Manufactured	No			230	Each	29.0000	2	2			
2.25 Support													
				Location		**Loc Qty**		**Loc Code**					
				LG052		29							
					70734	29							

Dart Aerospace Ltd

W/O:		WORK ORDER CHANGES					
DATE	STEP	PROCEDURE CHANGE	By	Date	Qty	Approval Chief Eng / Prod Mgr	Approval QC Inspector

Part No: _____ **PAR #:** _____ **Fault Category:** _____ **NCR:** Yes No **DQA:** _____ **Date:** _____

Resolution: _____ **Disposition:** _____ **QA: N/C Closed:** _____ **Date:** _____

NCR:		WORK ORDER NON-CONFORMANCE (NCR)						
DATE	STEP	Description of NC Section A	Corrective Action Section B			Verification Section C	Approval Chief Eng	Approval QC Inspector
			Initial Chief Eng	Action Description Chief Eng	Sign & Date			

NOTE: Date & initial all entries

H:\fFORMS\Quality Assurance\approved QA\NCRWO RevE

Picklist Print

Wednesday, June 22, 2011 8:57:16 AM

Work Order ID: 71043

Parent Item: D206-667-103BL

Parent Item Name: Crosstube Fwd, Blue

Start Date: 6/21/2011 **Required Date:** 7/8/2011

Start Qty: 1.00 **Required Qty:** 1.00

D3595-063-395	Manufactured	No	230	Each	13.0000	4	4	
RUBBER CUSHION								

Location	Loc Qty	Loc Code
LG055	13	
63368	1	
65361	12	

cut (4)0.063" X 3.95"

MS20601-AD4W8	Purchased	No	230	Each	295.0000	14	14	
RIVET								

Location	Loc Qty	Loc Code
LG	100	
108521	100	
LG051	195	
117106	7	
117381	88	
117979	100	

MS21920-20	Purchased	No	230	Each	68.0000	4	4	
Clamp (per MIL-DTL-8783C)								

Location	Loc Qty	Loc Code
LG050	68	
116799	10	
117279	38	
117968	20	

Dart Aerospace Ltd

W/O:		WORK ORDER CHANGES					
DATE	STEP	PROCEDURE CHANGE	By	Date	Qty	Approval Chief Eng / Prod Mgr	Approval QC Inspector

Part No: _____ **PAR #:** _____ **Fault Category:** _____ **NCR:** Yes No **DQA:** _____ **Date:** _____

Resolution: _____ **Disposition:** _____ **QA: N/C Closed:** _____ **Date:** _____

NCR:		WORK ORDER NON-CONFORMANCE (NCR)						
DATE	STEP	Description of NC Section A	Corrective Action Section B			Verification Section C	Approval Chief Eng	Approval QC Inspector
			Initial Chief Eng	Action Description Chief Eng	Sign & Date			

NOTE: Date & initial all entries

H:\fFORMS\Quality Assurance\approved QA\NCRWO RevE

Picklist Print

Wednesday, June 22, 2011 8:57:16 AM

Work Order ID: 71043

Parent Item: D206-667-103BL

Parent Item Name: Crosstube Fwd, Blue

Start Date: 6/21/2011 **Required Date:** 7/8/2011

Start Qty: 1.00 **Required Qty:** 1.00

AN5-30A BOLT	Purchased	No	250	Each	75.0000	4	4	

Location	Loc Qty	Loc Code
ST339	75	
116003	25	
117514	50	

AN5-32A Bolt	Purchased	No	250	Each	204.0000	4	4	

Location	Loc Qty	Loc Code
ST340	204	
115589	19	
117161	50	
117514	50	
117688	25	
117872	60	

AN5-7A Bolt	Purchased	No	250	Each	227.0000	10	10	

Location	Loc Qty	Loc Code
ST337	227	
117313	77	
117441	150	

AN960JD516 NAS1149D0563J Washer	Purchased	No	250	Each	0.0000	18	18	

Dart Aerospace Ltd

W/O:		WORK ORDER CHANGES					
DATE	STEP	PROCEDURE CHANGE	By	Date	Qty	Approval Chief Eng / Prod Mgr	Approval QC Inspector

Part No: _____ **PAR #:** _____ **Fault Category:** _____ **NCR:** Yes No **DQA:** _____ **Date:** _____

Resolution: _____ **Disposition:** _____ **QA: N/C Closed:** _____ **Date:** _____

NCR:		WORK ORDER NON-CONFORMANCE (NCR)						
DATE	STEP	Description of NC Section A	Corrective Action Section B			Verification Section C	Approval Chief Eng	Approval QC Inspector
			Initial Chief Eng	Action Description Chief Eng	Sign & Date			

NOTE: Date & initial all entries

H:\fFORMS\Quality Assurance\approved QA\NCRWO RevE

Picklist Print

Wednesday, June 22, 2011 8:57:17 AM

Work Order ID: 71043

Parent Item: D206-667-103BL

Parent Item Name: Crosstube Fwd, Blue

Start Date: 6/21/2011 **Required Date:** 7/8/2011

Start Qty: 1.00 **Required Qty:** 1.00

AN970-4	Purchased	No	250	Each	431.0000	12	12	
Washer								

Location		Loc Qty	Loc Code	
ST342		400		
	117795	400		
ST344		14		
	115936	14		
ST349		17		
	116900	1		
	117317	16		

MS21042L5	Purchased	No	250	Each	1,004.000	4	4	
Nut								

Location		Loc Qty	Loc Code	
ST300		1004		
	116105	46		
	116548	260		
	117441	498		
	117591	100		
	117611	100		

Dart Aerospace Ltd

W/O:		WORK ORDER CHANGES					
DATE	STEP	PROCEDURE CHANGE	By	Date	Qty	Approval Chief Eng / Prod Mgr	Approval QC Inspector

Part No: _____ **PAR #:** _____ **Fault Category:** _____ **NCR:** Yes No **DQA:** _____ **Date:** _____

Resolution: _____ **Disposition:** _____ **QA: N/C Closed:** _____ **Date:** _____

NCR:		WORK ORDER NON-CONFORMANCE (NCR)						
DATE	STEP	Description of NC Section A	Corrective Action Section B			Verification Section C	Approval Chief Eng	Approval QC Inspector
			Initial Chief Eng	Action Description Chief Eng	Sign & Date			

NOTE: Date & initial all entries

H:\fFORMS\Quality Assurance\approved QA\NCRWO RevE

DART AEROSPACE LTD	Work Order:	71043
Description: Crosstube High Fwd (206L)	Part Number:	D206-667-103
Inspection Dwg: D206-667-143 **Rev:** C		Page 1 of 1

Required Dimension	Min	Max
Height	23.39	23.65
1/2 Span	41.79	42.05
Angle	54	56
Total Span	83.58	84.10

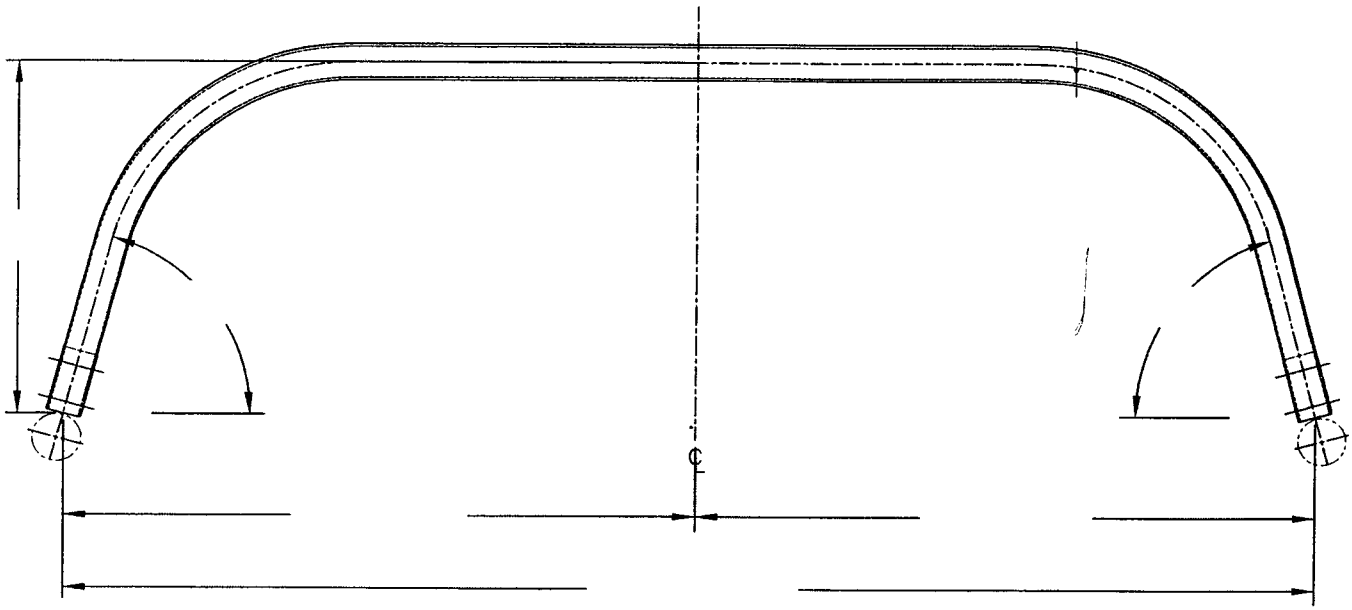

Comments

QC15 Inspection	
Date	

Rev	Date	Change	Revised by	Approved
A	07.02.06	New Issue	KJ/JM	
B	09.06.26	Dimensions updated per Dwg Rev C	KJ	
C	09.10.22	Minimum height dimension revised	KJ	

Item	Qty -143	Part Number	Description
1	X	D206-667-143	CROSSTUBE ASSEMBLY (206L HIGH FWD)
2	1	D6002-115	CROSSTUBE
3	2	D2873-043	NUT PLATE
4	2	D2873-045	NUT PLATE
5	2	D2891-1	SUPPORT
6	4	D3595-063-395	RUBBER CUSHION
7	4	MS21920-20	CLAMP (OR MS21920-21)
8	14	MS20601AD4W8	RIVET (OR NAS9302B-4-8)
9	A/R	MAGNOBOND 6398	ROCKWELL SPECIFICATION RBO-120-023 ADHESIVE (TEXTRON/BELL SPEC. 299-947-100, TYPE II, CLASS 2 ADHESIVE)

GENERAL NOTES:

1) MATERIAL: MANUFACTURED FROM D6002-115
   FINISHED LENGTH = 104.98±0.020
2) FINISH: CHEMICAL CONVERSION COAT PER DART QSI 005 4.1
   PRIME INSIDE AND OUTSIDE PER DART QSI 005 4.2
   PAINT OUTSIDE PER DART QSI 005 4.2
3) TOLERANCES ARE PER DART QSI 018 UNLESS OTHERWISE NOTED.
4) UNITS: INCHES UNLESS OTHERWISE NOTED.
5) BREAK SHARP EDGES: 0.005 TO 0.010 MAX.
6) IDENTIFICATION: SCRIBE DART PART NUMBER "D206-667-143" AND BATCH NUMBER ON INSIDE OF CUFF USING VIBRATING STYLUS.
7) WEIGHT: 15.5 lbs
8) PART IS SYMMETRIC ABOUT CENTERLINE.
9) RUN CUTTER OFF PART WHERE INDICATED. BLEND OUT EDGE LONGITUDINALLY, TRANSITION SHOULD BE SMOOTH.
10) BEND PROGRESSIVELY WITH A MINIMUM OF 10 PASSES. MAXIMUM TUBE FLATTENING DUE TO BENDING IS 6% BASED ON O.D.
11) LIQUID PENETRANT INSPECT OUTSIDE SURFACE OF CROSSTUBE PER QSI 038.
12) INSTALL D2891-1 SUPPORT USING 0.03" TO 0.06" THICK LAYER OF MAGNOBOND 6398 PER QSI 015. LET CURE FOR 12 HOURS AFTER INSTALLATION AND PRIOR TO PACKAGING.
13) INSTALL MS21920-20 CLAMPS (OR -21) WITH D3595-063-395 RUBBER CUSHIONS TO SECURE THE D2891-1 SUPPORT ON TOP SIDE OF THE CROSSTUBE. ENSURE CLAMP MECHANISMS ARE LOCATED ON CROSSTUBE SUPPORTS.
14) EXTREME CARE MUST BE TAKEN TO PROTECT THE OUTSIDE SURFACE OF THE TUBE. THE OUTSIDE SURFACE MUST BE SMOOTH AND FREE FROM SURFACE DEFECTS SUCH AS SCRATCHES, NICKS, OR DENTS. DEFECTS UP TO 0.005" MAY BE BLENDED OUT LONGITUDINALLY. CIRCUMFERENTIAL GRIND MARKS ARE UNACCEPTABLE.
15) TORQUE CLAMPS 80 TO 100 IN-LB. ENSURE AT LEAST 1.5 THREADS ARE SHOWING IN SAFETY AND THAT NUT HAS NOT BOTTOMED-OUT AFTER TORQUING.

mb 7/04/3

UNDER REVIEW
GP 11.06.13

RELEASED
08/11/12 MB

REV.	DESCRIPTION	BY	DATE
C	REVISE GENERAL NOTES/PART LIST (ZN D7-1); REORGANIZED VIEWS AND REFORMATTED DRAWING TO CURRENT STANDARDS. D3595-063-395 WAS D2856-400-694 (ZN D6-2 & A5-2); REMOVED REF. & ADD TOLERANCE (ZN D3-3, C4-3, C5-3); RELOCATED FLAG #6 (ZN A8-3) PER NCR 210; MOVED TURNING DETAIL & UPDATED TOLERANCE TO SHEET 4.	RF	08.11.06
B	ADD HOLES AND NUT PLATES FOR COMPATABILITY WITH BHT/AA SKUDTUBES	PH	05.07.26
A	NEW ISSUE	CP	00.11.17

DESIGN	GP	**DART AEROSPACE LTD** HAWKESBURY, ONTARIO, CANADA	
DRAWN	RF		
CHECKED	GP	DRAWING NO. D206-667-143	REV. C SHEET 1 OF 4
MFG. APPR.			
APPROVED		TITLE CROSSTUBE ASS'Y (206L HIGH FWD)	SCALE NTS
DE APPR.			
DATE 08.11.06			

COPYRIGHT © 2000 BY DART AEROSPACE LTD
THIS DOCUMENT IS PRIVATE AND CONFIDENTIAL AND IS SUPPLIED ON THE EXPRESS CONDITION THAT IT IS NOT TO BE USED FOR ANY PURPOSE OR COPIED OR COMMUNICATED TO ANY OTHER PERSON WITHOUT WRITTEN PERMISSION FROM DART AEROSPACE LTD

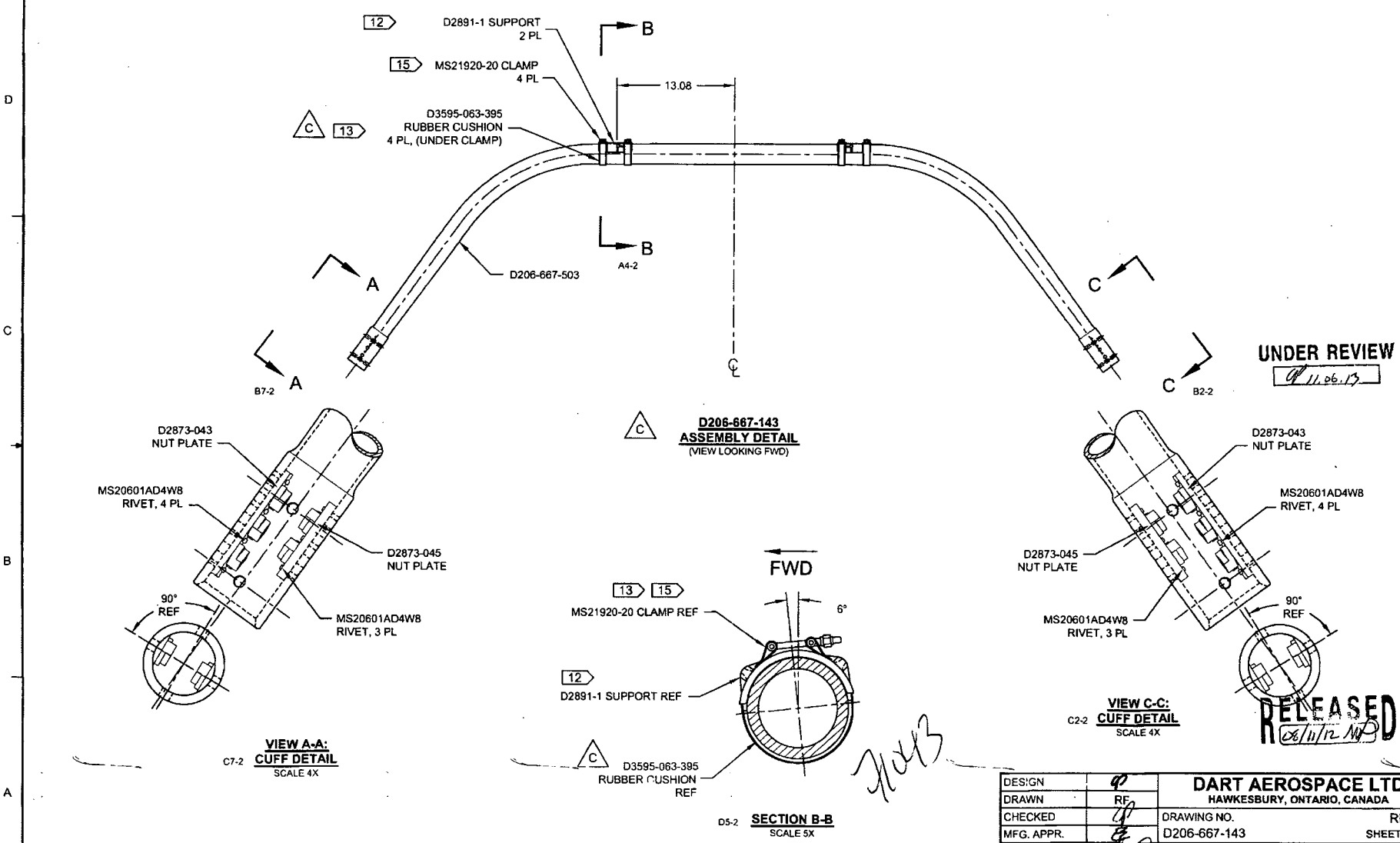

DESIGN		DART AEROSPACE LTD HAWKESBURY, ONTARIO, CANADA	
DRAWN	RF		
CHECKED		DRAWING NO.	REV. C
MFG. APPR.		D206-667-143	SHEET 2 OF 4
APPROVED		TITLE	SCALE
DE APPR.		CROSSTUBE ASS'Y (206L HIGH FWD)	NTS
DATE	08.11.06		

COPYRIGHT © 2000 BY DART AEROSPACE LTD
THIS DOCUMENT IS PRIVATE AND CONFIDENTIAL AND IS SUPPLIED ON THE EXPRESS CONDITION THAT IT IS NOT TO BE USED FOR ANY PURPOSE OR COPIED OR COMMUNICATED TO ANY OTHER PERSON WITHOUT WRITTEN PERMISSION FROM DART AEROSPACE LTD.

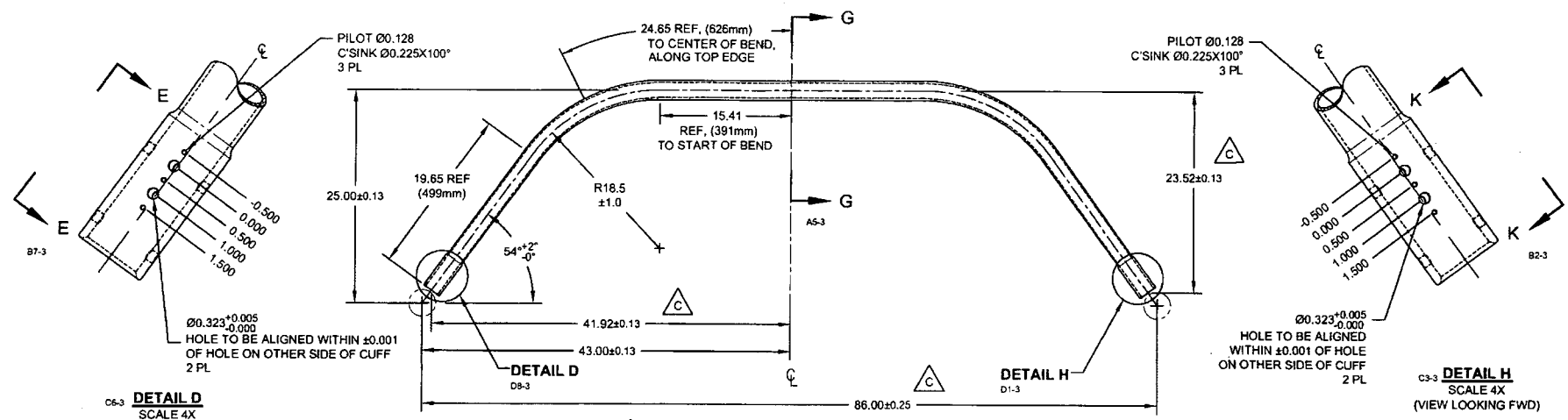

C6-3 **DETAIL D**
SCALE 4X
(VIEW LOOKING FWD)

C3-3 **DETAIL H**
SCALE 4X
(VIEW LOOKING FWD)

D206-667-503
BENDING AND DRILLING DETAIL
(VIEW LOOKING FWD)

UNDER REVIEW
11.06.13

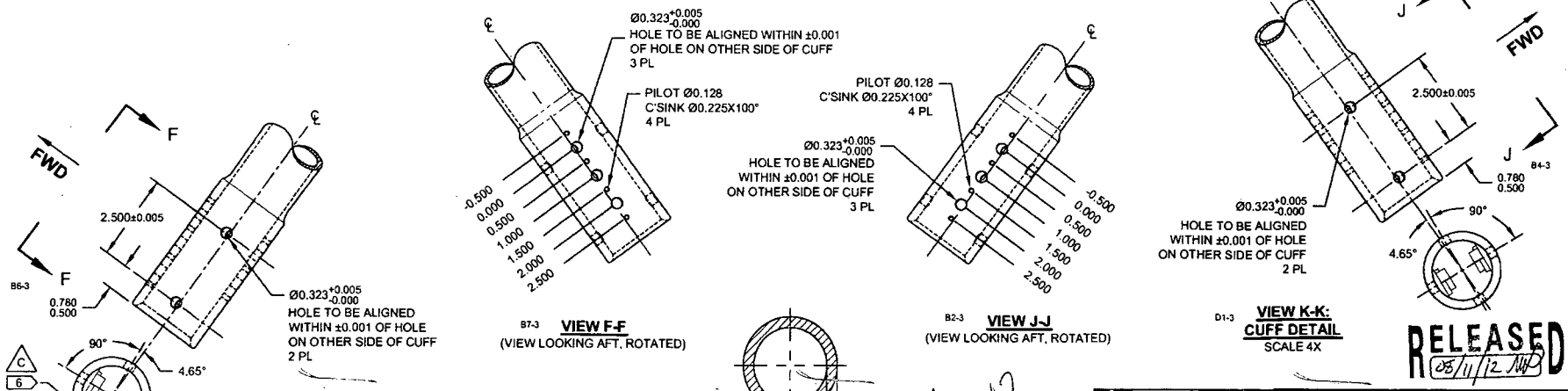

D8-3 **VIEW E-E: CUFF DETAIL**
SCALE 4X

B7-3 **VIEW F-F**
(VIEW LOOKING AFT, ROTATED)

B2-3 **VIEW J-J**
(VIEW LOOKING AFT, ROTATED)

D1-3 **VIEW K-K: CUFF DETAIL**
SCALE 4X

D4-3 **SECTION G-G**
SCALE 5X

RELEASED
08/11/12

DESIGN		**DART AEROSPACE LTD** HAWKESBURY, ONTARIO, CANADA	
DRAWN	RF	DRAWING NO. D206-667-143	REV. C SHEET 3 OF 4
CHECKED		TITLE CROSSTUBE ASS'Y (206L HIGH FWD)	SCALE NTS
MFG. APPR.			
APPROVED			
DE APPR.			
DATE	08.11.06		

COPYRIGHT © 2000 BY DART AEROSPACE LTD
THIS DOCUMENT IS PRIVATE AND CONFIDENTIAL AND IS SUPPLIED ON THE EXPRESS CONDITION THAT IT IS NOT TO BE USED FOR ANY PURPOSE OR COPIED OR COMMUNICATED TO ANY OTHER PERSON WITHOUT WRITTEN PERMISSION FROM DART AEROSPACE LTD.

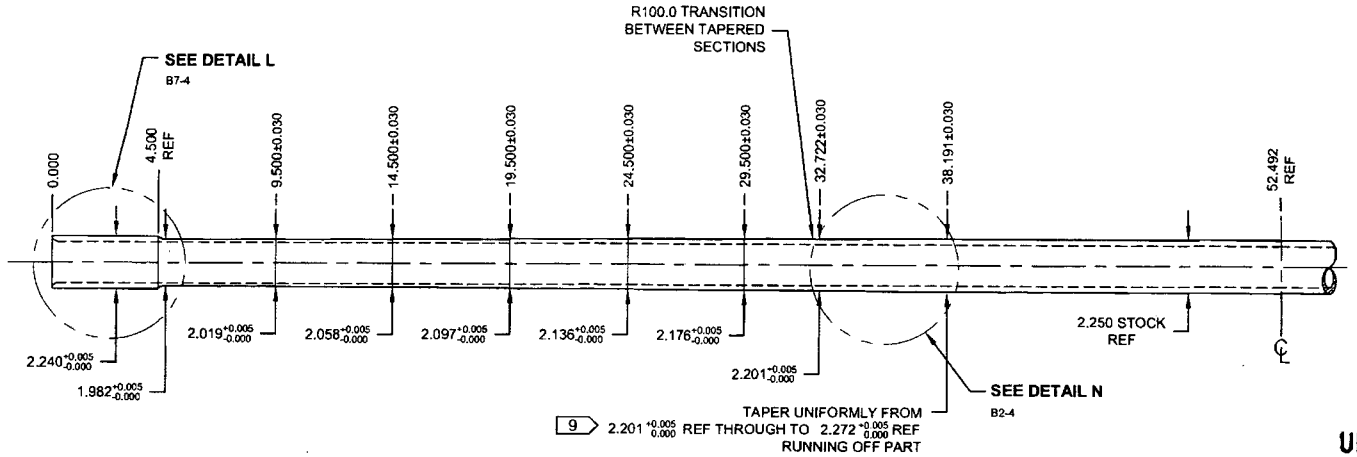

UNDER REVIEW
11.06.13

C TURNING DETAIL

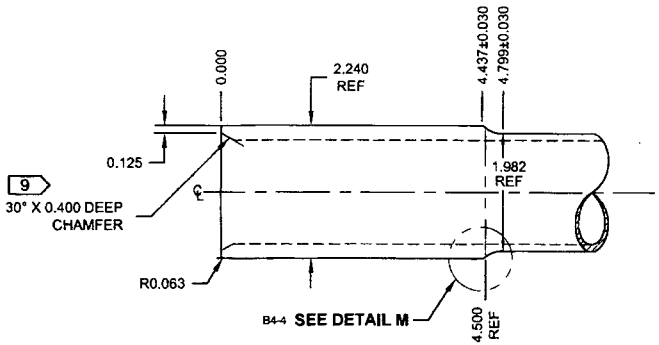

D7-4 **DETAIL L: CROSSTUBE CUFF**
NOT TO SCALE

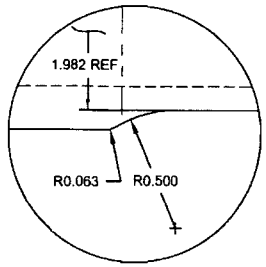

A6-4 **DETAIL M: CUFF TRANSITION**
NOT TO SCALE

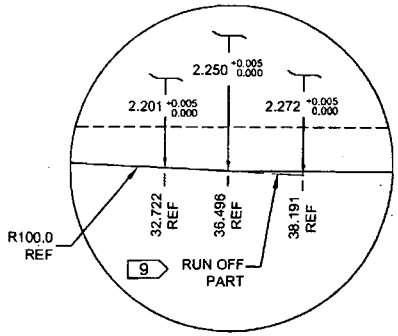

C4-4 **DETAIL N: TAPER RUN-OFF**
NOT TO SCALE

RELEASED
08/11/12

DESIGN		DART AEROSPACE LTD HAWKESBURY, ONTARIO, CANADA
DRAWN	RF	
CHECKED		DRAWING NO. D206-667-143 — REV. C — SHEET 4 OF 4
MFG. APPR.		
APPROVED		TITLE: CROSSTUBE ASS'Y (206L HIGH FWD) — SCALE: NTS
DE APPR.		
DATE	08.11.06	

COPYRIGHT © 2000 BY DART AEROSPACE LTD
THIS DOCUMENT IS PRIVATE AND CONFIDENTIAL AND IS SUPPLIED ON THE EXPRESS CONDITION THAT IT IS NOT TO BE USED FOR ANY PURPOSE OR COPIED OR COMMUNICATED TO ANY OTHER PERSON WITHOUT WRITTEN PERMISSION FROM DART AEROSPACE LTD.

Chris Provencal

From: David Shepherd <dshepherd@dartaero.com>
Sent: Wednesday, June 15, 2011 3:05 PM
To: 'Chris Provencal'
Cc: 'Mike Petsche'; 'Dan Stow'; 'Eric Downing'; 'Linda Lacelle'
Subject: RE: Procedure for installing supports.

Follow Up Flag: Follow up
Flag Status: Flagged

Hi Chris,

I agree with your procedure outlined below. It is our preference to leave the paint on the crosstube if we can for added corrosion protection (and for ease of manufacture). If Dan's final testing shows there is a big difference between a painted/unpainted crosstube, then we will switch to alodine only on the crosstube.

David

From: Chris Provencal [mailto:cprovencal@dartaero.com]
Sent: Wednesday, June 15, 2011 11:24 AM
To: 'David Shepherd'
Cc: 'Mike Petsche'; 'Dan Stow'; 'Eric Downing'
Subject: RE: Procedure for installing supports.

David,

Can I confirm that this is the agreed procedure for all newly manufactured tubes with off-center supports:

- Scuff paint under support, clean with MEK
- Completely remove any finish on support (if present), scuff bottom surface of support, clean with MEK
- Apply a 0.04" – 0.07" layer of Proseal 890 class B-2 on bottom of support and install wet.
- Install clamps and torque per dwg
- Clean up excess proseal
- Let cure for 72 hours after installation, recheck torque.

Chris

From: David Shepherd [mailto:dshepherd@dartaero.com]
Sent: Tuesday, June 14, 2011 10:59 AM
To: 'Chris Provencal'
Cc: 'Mike Petsche'; 'Dan Stow'; 'Eric Downing'
Subject: RE: Procedure for installing supports.

Made a couple of small changes.

- Remove finish on xtube in area of support down to alodine finish.
- Touch up alodine on xtube in affected area
- Completely remove any finish on support, scuff bottom surface of support
- Apply a 0.04" – 0.07" layer of Proseal 890 class B-2 on bottom of support and install wet.
- Install clamps and torque per dwg